The holomorphic flow of Riemann's function $\xi(z)$.

Version: 21st March 2003

Kevin A. Broughan

University of Waikato, Hamilton, New Zealand
E-mail: kab@waikato.ac.nz

The holomorphic flow $\dot{z} = \xi(z)$ of Riemann's xi function is considered. Phase portraits are plotted and the following results, suggested by the portraits, proved: All separatrices tend to the positive and/or negative real axes. There are an infinite number of crossing separatrices. In the region between each pair of crossing separatrices, a band, there is at most one zero on the critical line. All zeros on the critical line are centers or have all elliptic sectors. The flows for $\xi(z)$ and $\cosh(z)$ are linked with a differential equation. Simple zeros on the critical line and Gram points never coincide. The Riemann hypothesis is equivalent to all zeros being centers or multiple together with the non existence of separatrices which enter and leave a band in the same half plane.

Key Words: dynamical system, xi function, zero, separatrix, phase portrait, Riemann hypothesis, complex differential equation

MSC2000 11A05, 11A25, 11M06, 11N37, 11N56.

1. INTRODUCTION

In this paper the flow $\dot{z} = \xi(z)$ is considered, with the aim of gaining some further insight into the nature and relationships of the common zeros of the functions $\zeta(z)$ and $\xi(z)$. It should be regarded as a continuation of the paper [3] but also relies on results found in [2] and [4]. (Reference [3] contains background information on dynamical systems.) In summary: the phase portraits of the flows, while restricted necessarily to a small part of the complex plane, exhibit patterns which can be taken as a guide to exploring analytic relationships which would apply generally.

The zeros of $\zeta(z)$ have been studied from many points of view. However, the main emphasis, because of their relationship with the error terms in the prime number and other theorems, has been their position rather than their nature. The guiding philosophy behind this work is that studies of

the nature of the zeros (as equilibrium points of the flows $\dot{z} = \zeta(z)$ and $\dot{z} = \xi(z)$) has a bearing on their positions, and will lead to deeper insight into the range of possibilities for their positions. The phase portraits are experiments, leading to natural conjectures on what might be true. As well as the theorems proved here and elsewhere, these when considered by others, could result in other conjectures and results.

In Section 2 the phase portrait for $\dot{z} = \xi(z)$ is plotted for the region $[-20, 20] \times [0, 40]$ containing 6 zeros and $[20, 60] \times [0, 40]$ containing 15 separatrices. Then a close-up view of the region near zeros numbered 1, 2, 28 and 356 is given. (There is nothing especially distinctive about these zeros - they are a representative sample of those that have been viewed: Close-up views of the first 30 zeros are given on the web site [5].) The section concludes with a list of observations made from these portraits.

In Section 3, in order that the separatrices might be described analytically for large x, expressions giving asymptotic approximations for the isoclines $\Im\xi(z) = 0$ are derived. It is proved that there is a separatrix between each of these isoclines, and that all separatrices tend to the x-axis. It is also proved that there are an infinite number of crossing separatrices. This is deduced from the theorem, which is also proved, that all zeros on the critical line for $\dot{z} = \xi(z)$ are centers or have all elliptic sectors. That Gram points and simple zeros of $\zeta(z)$ are distinct becomes a simple consequence of this and the zero classification given in [3].

In Section 4 the regions between the crossing separatrices, denoted bands, are considered and band number defined. Sketches of band configurations, some of which under the Riemann hypothesis should not exist, are given. There are a finite number of zeros in each band. Constraints relating the parity of the band number, existence or non-existence of a zero on the critical line within a band, and the types (simple or multiple, topological type) of zeros within a band are derived. Band number zero is equivalent to the Riemann hypothesis with all zeros being simple.

With more depth the Riemann hypothesis is also equivalent to the combination of two conditions: all zeros being either centers or of multiple order and the non-existence of separatrices which enter and leave the critical strip on the same side (re-entrant).

These results come from constraints involving crossing times on separatrices, symmetry, the residues of $1/\xi(z)$ at zeros of $\xi(z)$, the topology of the flow and their interrelationships. Further constraints on possible zero configurations are expected to come from good estimates of function values.

The phase portrait of $\dot{z} = \cosh(z)$ is observed to be very similar to that of $\dot{z} = \xi(z - \frac{1}{2})$. In Section 5 a differential equation which would be satisfied by a holomorphic function mapping the parametrized orbits of ξ to those of cosh is derived and solutions, in terms of ξ, written down. There is a lot more to show whether or not this differential equation could prove to be

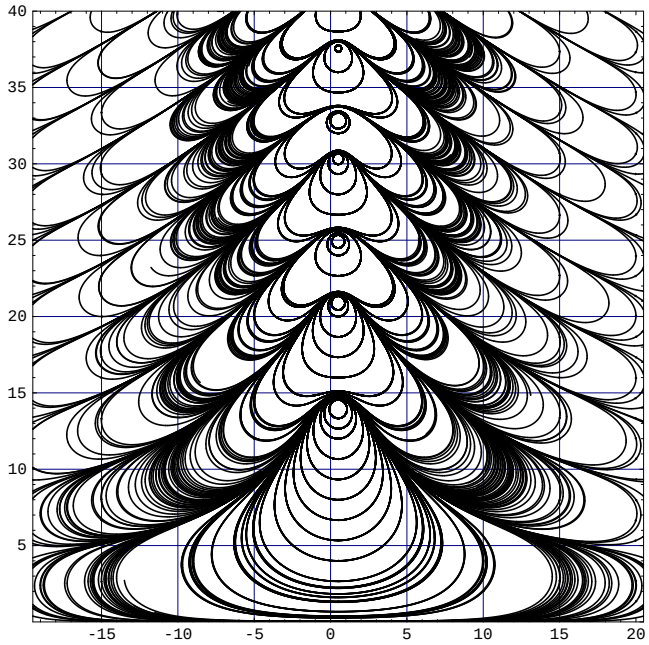

FIG. 1. The phase portrait of $\dot{z} = \xi(z)$ in $[-20, 20] \times [0, 40]$.

a useful tool. In this regard the equation satisfied by the inverse mapping should be more tractable, given that its fixed singularities coincide with the zeros of cosh, so are much more accessible than those of ξ.

2. PHASE PORTRAITS

Phase portraits for rectangular subsets of the flow $\dot{z} = \xi(z)$ are given in Figures 1 through 6 below. The following observations arise:

1. The phase portrait is symmetric with respect to reflection in the x-axis and line $x = \frac{1}{2}$.

2. The "stand out" feature is not the zeros but the separatrices, the orbits between the neighborhoods of the zeros formed by the periodic orbits. Each of these separatrices is "crossing" in that it goes from right to left or left to right across the entire complex plane.

3. Each crossing separatrix crosses each vertical line at at unique point.

4. If $y = f(x)$ is the equation of a crossing separatrix then $f(x)$ is a smooth function, $f(x) = f(-x)$, $f'(\frac{1}{2}) = 0$, $f'(x) \neq 0$ for $x \neq \frac{1}{2}$ and $\lim_{x \to \pm\infty} f(x) = 0$.

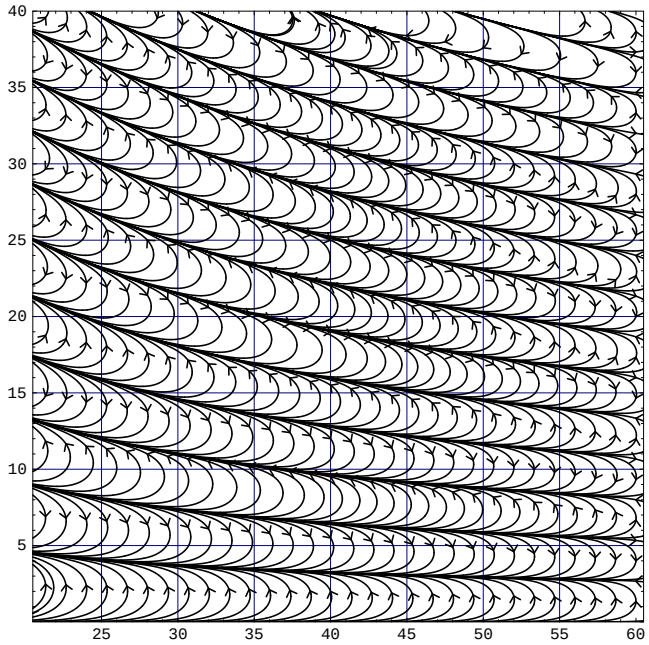

FIG. 2. The phase portrait of $\dot{z} = \xi(z)$ in $[20, 60] \times [0, 40]$.

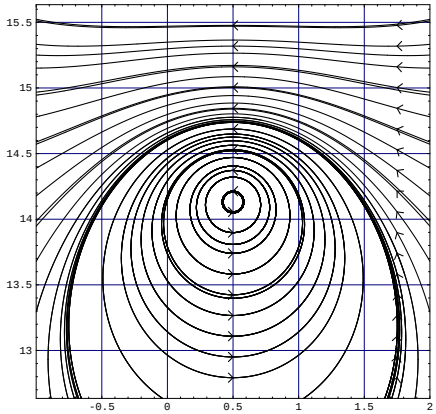

FIG. 3. Zero 1 phase portrait.

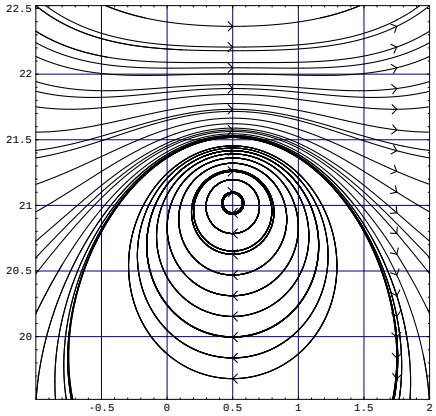

FIG. 4. Zero 2 phase portrait.

5. Let $\xi(x + iy) = u + iv$. Each crossing separatrix $S \neq \{y = 0\}$ is such that $v(x, y) < 0$ and $u(x, y) > 0$ for all $(x, y) \in S$ with $x > \frac{1}{2}$.

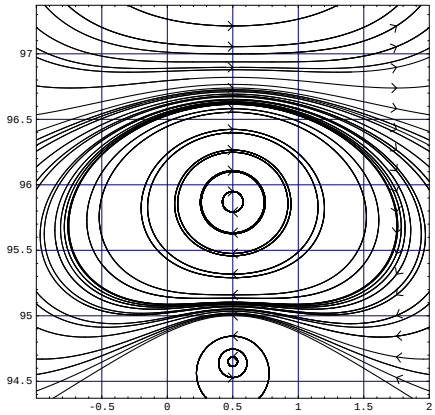

FIG. 5. Zero 28 phase portrait.

FIG. 6. Zero 356 phase portrait.

6. Crossing separatrices cross the critical line between points where $u = 0$ and $u_y = 0$.

7. The region between each successive pair of crossing separatrices is filled with a family of periodic orbits about a simple zero on the critical line, such that the two separatrices form the boundary of the neighborhood consisting of the zero and the periodic orbits which surround it.

8. Although the spacing between the zeros on the critical line has a random element, the separatrices tend to the x-axis at $\pm\infty$ in a regular and consistent manner. In the region between the separatrices (termed a "band") there is one isocline $v = 0$ and one isocline $u = 0$, for $|x|$ sufficiently large.

3. SEPARATRICES

The definition of separatrix, suitable for application in this setting, is developed in reference [4].

LEMMA 3.1. *For every $a > \frac{1}{2}$ no separatrix of the flow $\dot{z} = \xi(z)$ goes to infinity in the strip $[\frac{1}{2}, a] \times \mathbb{R}$. In other words every separatrix crosses the vertical line $x = a$.*

Proof. It follows from [7, Page 134, 227] that $|\xi(z)|$ is bounded in the strip $[1/2, a] \times \mathbb{R}$, say $\xi(z)| \leq M$ where $M > 0$. Let γ be a separatrix which lies in the strip and, without loss of generality, assume $\lim_{t\to\infty} \gamma(t) = \infty$. If $P \in \gamma$ is a fixed point and $Q \in \gamma$ another point with $\Im(Q) > \Im(P)$, because on γ, dz is parallel to $\xi(z)$, it follows that $dz/\xi(z) = ds/|\xi(z)|$ so

therefore, if τ is the transit time defined in [4]:

$$\tau(P,Q) = \int_P^Q \frac{dz}{\xi(z)} \geq \frac{\Im(Q) - \Im(P)}{M}.$$

This implies the transit time $\tau(P,Q) \to \infty$ as $Q \in \gamma$ tends to infinity. But this is impossible, since γ is a separatrix [2, Definition 2.1]. Therefore no separatrix goes to infinity in the strip. ▮

Now define the function $\Phi(z)$ by:

$$\xi(z) = \frac{z(z-1)}{2}\pi^{-z/2}\Gamma(\frac{z}{2})\zeta(z) = \Phi(z)\zeta(z).$$

Lemma 3.2. *The $v := \Im(\Phi(x+iy)) = 0$ isoclines for the flow $\dot{z} = \Phi(z)$ tend to the curves*

$$\tan(\frac{y}{2}\log\frac{x}{2\pi}) = \frac{y}{1-x}$$

when $z = x+iy$ and $x \to \infty$.

Proof. For positive x we can use the approximation

$$\Gamma(z+1) = \sqrt{2\pi}\exp((z+\tfrac{1}{2})\log z - z).$$

so

$$\begin{aligned}
\Phi(2z) &= \Gamma(z+1)\pi^{-z}(2z-1) \\
&= \sqrt{2\pi}\exp[(x+\tfrac{1}{2}+iy)\log(x+iy) - (x+iy)(1+\log\pi)](2x-1+2iy) \\
&= \sqrt{2\pi}\exp[((x+\tfrac{1}{2})+iy)(\log\sqrt{x^2+y^2} + i\arctan\tfrac{y}{x}) - (x+iy)(1+\log\pi)] \\
&\quad \times(2x-1+2iy)
\end{aligned}$$

Hence

$$\begin{aligned}
\Phi(z) &= \sqrt{2\pi}\exp[((\frac{x}{2}+\tfrac{1}{2})+i\tfrac{y}{2})(\log\tfrac{1}{2}\sqrt{x^2+y^2} + i\arctan\tfrac{y}{x}) - \tfrac{1}{2}(x+iy)(1+\log\pi)] \\
&\quad \times(x-1+iy).
\end{aligned}$$

The equation of the isocline $v = 0$ is

$$0 = \Im[(\cos\theta + i\sin\theta)((x-1)+iy)]$$

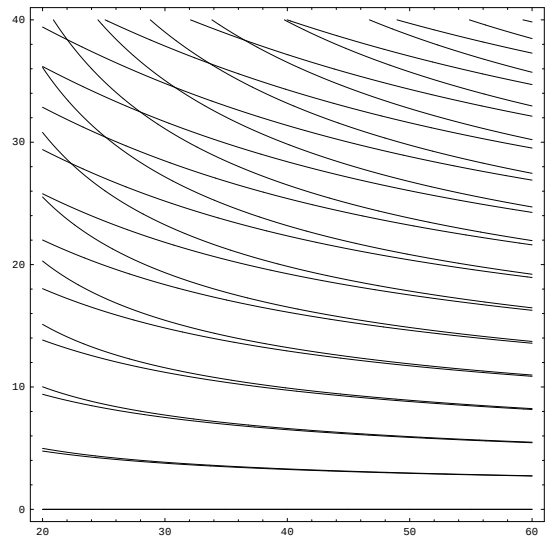

FIG. 7. Contours of the asymptotes and their approximations.

where

$$\theta = \frac{y}{2}\log\tfrac{1}{2}\sqrt{x^2+y^2} + \tfrac{1}{2}(x+1)\arctan\tfrac{y}{x} - \tfrac{y}{2}(1+\log\pi) \quad (1)$$

so

$$0 = y\cos\theta + (x-1)\sin\theta \quad (2)$$

and therefore

$$\tan\theta = -\frac{y}{x-1}.$$

As $x \to \infty$ with $|y|$ bounded,

$$\begin{aligned} \frac{y}{2}\log\tfrac{1}{2}\sqrt{x^2+y^2} &\to \frac{y}{2}\log\tfrac{1}{2}x \quad \text{and} \\ \tfrac{1}{2}(x+1)\arctan\tfrac{y}{x} &\to \frac{y}{2} \end{aligned}$$

so $\theta \to \frac{1}{2}y\log(x/2\pi)$. Hence the equation, asymptotically as $x \to \infty$, is

$$\tan(\frac{y}{2}\log\frac{x}{2\pi}) = \frac{y}{1-x}.$$

∎

A better approximation, including an error estimate, is given by the following:

Lemma 3.3. *The $v = \Im(\Phi(z)) = 0$ isoclines for the flow $\dot{z} = \Phi(z)$ tend to the curves*

$$y = \frac{2}{\log \frac{x}{2\pi} + \frac{1}{x}}(n\pi - \tan^{-1} \frac{y}{x-1})$$

for $n \in \mathbb{N}$ when $x \to \infty$ with y bounded, where the inverse tangent has its principlal value. If, for given $x > 1$, $\hat{y}$ is the value on the approximating curve, and y on the contour $v = 0$, then

$$|\hat{y} - y| \ll \frac{y^3}{x}$$

where the implied constant is absolute.

Proof. Consider equation (1) in the proof of Lemma 3.2. Approximate θ by $\hat{\theta}$ where

$$\hat{\theta} = \frac{y}{2} \log \frac{x}{2\pi} + \frac{y}{2x}.$$

Then, as $x \to \infty$,

$$|\theta - \hat{\theta}| \ll \frac{y^3}{x^3}.$$

But by equation (2) in Lemma 3.2:

$$0 = y \cos\theta + (x-1)\sin\theta$$
$$0 = \hat{y} \cos\hat{\theta} + (x-1)\sin\hat{\theta}$$

so therefore

$$|\frac{y - \hat{y}}{x-1}| = O(\frac{y^3}{x^2})$$

and the result of the lemma follows. ∎

Lemma 3.4. *The curves*

$$y = \frac{2}{\log \frac{x}{2\pi} + \frac{1}{x}}(n\pi - \tan^{-1} \frac{y}{x-1})$$

when $x \to \infty$, tend monotonically to the y-axis.

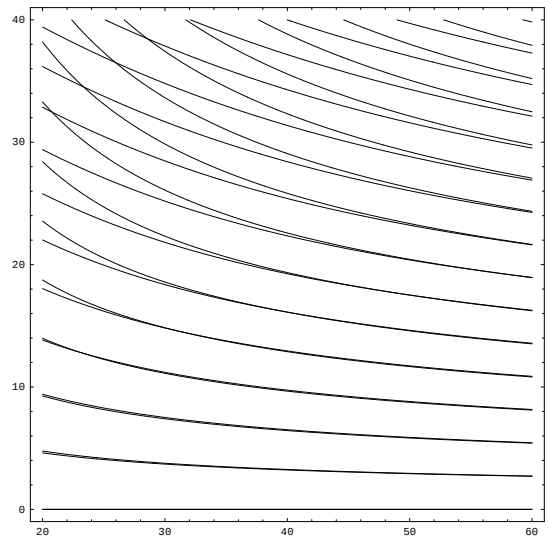

FIG. 8. An improved approximation for $\Im\xi(z) = 0$.

Proof. Let the equation of a curve be $y(x)$ with $y(x_o) > 0$. Then

$$\begin{aligned} \frac{dy}{dx} \cdot f(x,y) &= -y \cdot g(x,y) \quad (1) \\ f(x,y) &= \tfrac{1}{2}(\log \tfrac{x}{2\pi} + \tfrac{1}{x})(1 + \tfrac{y^2}{(x-1)^2}) + \tfrac{1}{x-1} \\ g(x,y) &= \frac{x-1}{2x^2}(1 + \frac{y^2}{(x-1)^2}) - \frac{1}{(x-1)^2}. \end{aligned}$$

Now $f(x,y) > 0$ for $x > 1$ and $g(x,y) > 0$ for $x \geq 5$. Therefore $y' < 0$ and $y > 0$ for $x > 5$ so $L = \lim_{x\to\infty} y(x)$ exists. But then

$$\lim_{x\to\infty} \frac{y(x)}{x-1} = 0$$

which implies

$$\lim_{x\to\infty} \frac{y}{2} \log \frac{x}{2\pi} = 0$$

also and therefore $\lim_{x\to\infty} y(x) = 0$. ∎

THEOREM 3.1. *Let σ be sufficiently large. Then, for $\Re(z) \geq \sigma$, the flow $\dot{z} = \xi(z)$ has a separatrix between each of the successive isoclines $v = 0$ of the flow $\dot{z} = \Phi(z)$.*

Proof. 1. For the flow $\dot{z} = \Phi(z)$, $u = \Re\Phi(z)$ changes sign on successive isoclines $v = 0$: The equation of an isocline is

$$0 = \Im e^{i\theta}((x-1) + iy).$$

Fix $x > 1$ and let successive isoclines of $\Im\Phi(z)$ have y values y_n, y_{n+1} with corresponding theta values θ_n, θ_{n+1} respectively. Let

$$\begin{aligned} u_n &= \Re e^{i\theta_n}((x-1) + iy_n) \\ u_{n+1} &= \Re e^{i\theta_{n+1}}((x-1) + iy_{n+1}) \quad \text{also} \\ 0 &= \Im e^{i\theta_n}((x-1) + iy_n) \\ 0 &= \Im e^{i\theta_{n+1}}((x-1) + iy_{n+1}). \end{aligned}$$

Since $\Phi(z) \neq 0$ for all $z \in \mathbb{C}$ and $v = 0$ on each isocline of $\Im\Phi(z)$, $u_n \neq 0$ and $u_{n+1} \neq 0$. Note that

$$u_n u_{n+1} = e^{i(\theta_n + \theta_{n+1})}((x-1)^2 - y_n y_{n+1} + i(x-1)(y_n + y_{n+1})).$$

Since $\tan(\theta_n) = -y_n/(x-1) < 0$, we have $\pi/2 < \theta_n \bmod \pi < \pi$ so there exists an integer l such that

$$\begin{aligned} \beta_n &:= l\pi - \theta_n \text{ with } 0 < \beta_n < \frac{\pi}{2} \\ \beta_{n+1} &:= (l+1)\pi - \theta_{n+1} \text{ with } 0 < \beta_{n+1} < \frac{\pi}{2}, \end{aligned}$$

so therefore

$$\begin{aligned} e^{i(\theta_n + \theta_{n+1})} &= -e^{-i(\beta_n + \beta_{n+1})} \\ u_n u_{n+1} &= -e^{-i(\beta_n + \beta_{n+1})}[(x-1)^2 - y_n y_{n+1} + i(x-1)(y_n + y_{n+1})]. \end{aligned}$$

Since $y_n, y_{n+1} < x - 1$, it follows that $(x-1)^2 - y_n y_{n+1} > 0$ so if

$$\alpha = \mathrm{Arg}((\mathrm{x}-1)^2 - \mathrm{y_n y_{n+1}} + \mathrm{i}(\mathrm{x}-1)(\mathrm{y_n} + \mathrm{y_{n+1}})),$$

$0 < \alpha < \pi/2$. But $0 < \beta_n + \beta_{n+1} < \pi$ so

$$\alpha - \pi < \mathrm{Arg}(-\mathrm{u_n u_{n+1}}) < \alpha.$$

Therefore, because $-u_n u_{n+1}$ is real, its argument must be zero, so u_n and u_{n+1} have opposite signs.

2. The flow $\dot{z} = \Phi(z)$, with orbits $\phi(z,t)$, escapes to infinity on a unique orbit between successive isoclines, where the sign of u is negative on the lower and positive on the upper isocline. It returns from infinity when these signs are reversed: To show this the techniques adopted in [10, Chapter VIII] could be adopted, but we use a more direct approach.

Let $y_n(x)$ and $y_{n+1}(x)$ be successive isoclines, denoted L and U respectively, so U is above L, with $1 < \sigma \leq x$ and σ sufficiently large. Assume, without loss of generality, that $u < 0$ on L and $u > 0$ on U.

Consider the open interval

$$P = \{t \in \mathbb{R} : y_n(\sigma) < t < y_{n+1}(\sigma)\}$$

and open region

$$\Omega = \{z \in \mathbb{C} : \sigma < \Re z, y_n(x) < \Im z < y_{n+1}(x)\}.$$

Let

$$Q = \{x \in P : \phi(x,t) \text{ enters } \Omega \text{ for } t > 0\}.$$

Then $Q \subset P$ is an open interval.

Let

$$E = \{x \in Q : \phi(x,t) \text{ leaves } \Omega \text{ via } U\}$$
$$F = \{x \in Q : \phi(x,t) \text{ leaves } \Omega \text{ via } L\}$$

Then $E \cap F = \emptyset$ and each is open in Q. If $u \in E$ and $v \in F$ then $u > v$. Hence there is a unique point $y \in Q$ such that the orbit $\phi(y,t)$ enters but does not leave Ω. Since $\Phi(z)$ is never zero in $\overline{\Omega}$, and there are no limit cycles [2, Theorem 3.2], $\phi(y,t)$ escapes to infinity.

3. The flow $\dot{z} = \xi(z)$ escapes to infinity between successive isoclines $v = 0$ of $\dot{z} = \Phi(z)$ (on a unique orbit) : To see this consider the isocline $y(x)$ through (x_o, y_o) in the first quadrant. From the $\zeta(z)$ Dirichlet series:

$$|\zeta(z) - 1| \leq \frac{1}{(x-1)2^{x-1}}$$

where $x = \Re z$. Therefore

$$|\tan(\mathrm{Arg}\zeta(\mathrm{z}))| \ll \frac{1}{\mathrm{x}2^{\mathrm{x}}} \text{ as } \mathrm{x} \to \infty.$$

From equation (1) of Lemma 3.4, the slope of the isocline at (x,y) is given by $dy/dx = -y \cdot g(x,y)/f(x,y)$, so

$$|\frac{dy}{dx}| \gg \frac{1}{x \log x},$$

and therefore Argζ(z) is in absolute value strictly less than the slope of the isocline at each point. Hence $\Phi(z)\zeta(z)$ and $\Phi(z)$ will both together point either into Ω or out of Ω. We can then use the argument used in part 2. to show that the flow $\dot{z} = \Phi(z)\zeta(z) = \xi(z)$ escapes to infinity between successive isoclines also.

4. The flow $\dot{z} = \xi(z)$ has a separatrix between successive isoclines $v = 0$ of $\dot{z} = \Phi(z)$: We may assume a configuration similar to that given in Figure 2, namely two successive orbits escaping to infinity and returning from infinity respectively with a continuous family of orbits making the ensemble a "saddle at infinity" in terms of the model adopted in [14]. If τ is the transit time function, and P, Q are two points on the escaping orbit, with P fixed and $\Re Q > \Re P$. Let $A = \Re P$, $B = \Re Q$ and consider the transit time computed by shifting the contour so it coincides in part with the x-axis.

$$\tau(P,Q) = \int_P^A \frac{dz}{\xi(z)} + \int_A^B \frac{dx}{\xi(x)} + \int_B^Q \frac{dz}{\xi(z)}.$$

The first integral on the right has fixed modulus, the second is bounded (since $\xi(x) \sim x^x$) and the last can be made arbitrarily small provided $|Q|$ is sufficiently large. Hence the transit time is bounded so the orbit which escapes to infinity is a separatrix. ▮

Note that in proving step 3. in the theorem above, the results [14, Proposition 4.5, Corollary 4.6] could, on the face of it, be used. However, it appears that in moving from the orbits of $\dot{z} = \Phi(z)$ to those of the nearby $\dot{z} = \xi(z)$, the compact open topology is too coarse and the strong compact open too fine. There is probably some intermediate topology for which step 3. becomes a consequence of more general results for vector fields.

Corollary 3.1. *If $y(x)$ is the equation of a separatrix path through (σ, δ) with σ sufficiently large, for the flow $\dot{z} = \xi(z)$, then* $\lim_{x\to\infty} |y(x)| = 0$.

Theorem 3.2. *All separatrices tend to the real axis asymptotically as $t \to \pm\infty$.*

Proof. This follows directly from Lemma 3.1 and Corollary 3.1. ▮

Definition 3.1. A **positive crossing separatrix** is a separatrix for the flow of ξ which tends to real $-\infty$ as t tends to $-\infty$ and to real ∞ as t tends to ∞. A **negative crossing separatrix** is defined similarly and goes from right to left with increasing t. A **crossing separatrix** is either

a positive or a negative crossing separatrix. It does not begin or end at a finite critical point nor contain any finite critical points.

LEMMA 3.5. *Each crossing separatrix crosses the critical line* $\Re s = \frac{1}{2}$ *at exactly one point.*

Proof. If any orbit crosses (or even touches) the critical line at two distinct points, then, by the symmetry of $\xi(z)$, these two points are on a periodic orbit and therefore cannot belong to a crossing separatrix. ∎

The following theorem should be in the next section, but is given here since it is needed to show there are an infinite sequence of crossing separatrices.

THEOREM 3.3. *Each simple zero of* ξ *for* $\dot{z} = \xi(z)$ *on the critical line is a center. Any zero on the critical line which is not simple has all elliptic sectors.*

Proof. Let $\xi(z) = u+iv$ and z_0 a simple zero of ξ. Then $\xi'(z_0) = u_x+iv_x$ and $\lambda_\pm = \{\xi'(z_0), \overline{\xi'(z_0)}\}$. But $\xi(z)$ is real on the line $x = \frac{1}{2}$. Hence $v_y = u_x = 0$ and therefore $\lambda_\pm = \pm iv_x$. Since the zero is simple, $v_x \neq 0$, so the zero is a linear center. Since $\xi(z)$ is symmetric with respect to reflections in $x = \frac{1}{2}$, the critical point is a center for $\dot{z} = \xi(z)$ [2, Theorem 2.8].

If a zero on the critical line is not simple then it must have all elliptic sectors by [2, Theorem 2.5]. ∎

Restricting the functions $\zeta(s)$ and $\xi(s)$ to the critical line (and adopting the standard notation $s = \frac{1}{2} + it$) we can write [7, Page 119]:

$$\xi(\tfrac{1}{2} + it) = f(t)e^{i\vartheta(t)}\zeta(\tfrac{1}{2} + it)$$

where $f(t)$ is real and negative and $\vartheta(t)$ is defined by

$$\vartheta(t) = \Im \log \Gamma(\tfrac{1}{2}it + \tfrac{1}{4}) - \tfrac{1}{2}t \log \pi.$$

A good approximation is provided by [7, Page 120]

$$\vartheta(t) = \frac{t}{2} \log \frac{t}{2\pi} - \frac{t}{2} - \frac{\pi}{8} + \frac{1}{48t} + O(\frac{1}{t^3}).$$

COROLLARY 3.2. *Let* $\frac{1}{2} + it_o$ *be a simple zero of* $\zeta(s)$. *Then* $\vartheta(t_o) \not\equiv 0 \bmod \pi/2$.

Proof. Differentiating with respect to t and setting $t = t_o$ we obtain:

$$i\xi'(\tfrac{1}{2} + it_o) = if(t_o)e^{i\vartheta(t_o)}\zeta'(\tfrac{1}{2} + it_o).$$

By Theorem 3.3 the left hand side is real. Take arguments of both sides:

$$0 \equiv \vartheta(t_o) + \arg\zeta'(\tfrac{1}{2} + it_o) \bmod \tfrac{\pi}{2}.$$

The result then follows by [3, Theorem 4.6]. ∎

The significance of this corollary: If $Z(t) = e^{i\vartheta(t)}\zeta(\frac{1}{2} + it)$ then $Z(t)$ is real on the critical line. The standard technique for counting zeros of ζ or ξ on the line is to recognize that since $\Re\zeta(\frac{1}{2} + it)$ is positive or very close to zero on the line, the product $Z(t)\cos(\vartheta(t)) = \Re\zeta(\frac{1}{2} + it)$ changes sign between each value $\vartheta(g_n) = n\pi$, for $n = 1, 2, \ldots,$ where (g_n) are the so-called Gram points. But in this situation, ζ must have a zero of odd order between each pair of suitable (i.e. with positive or nearly positive real part of zeta values) Gram points. The corollary shows that, for example, simple zeros and Gram points never coincide.

By [11, 15] and Theorem 3.3, there exists an infinite sequence of centers on the critical line. Each center is in the interior of a "band" (see Section 4) which extends across the complex plane with boundaries being crossing separatrices for the flow. By [2, Theorem 3.2] there are no limit cycles. Hence the family of periodic orbits surrounding a given center must either extend to infinity or tend to a separatrix, or set of separatrices, which have the point at infinity as their alpha and omega limit points.

By symmetry and Theorem 3.2, a crossing separatrix (for the flow $\dot{z} = \xi(z)$) is a separatrix which meets the line $x = \frac{1}{2}$.

THEOREM 3.4. *There exists a sequence of distinct crossing separatrices crossing the critical line at $\frac{1}{2} + ic_j, j \in \mathbb{N}$ with $0 < c_j$ and $c_j \to \infty$, and such that between each pair c_j, c_{j+1} there is no crossing separatrix. If c_0 (has a graph which) is the real axis, then the family of all crossing separatrices is $(c_j : j \in \mathbb{Z})$ where c_{-j} is the mirror image of c_j in the x-axis.*

Proof. 1. There exists an infinite number of zeros of $\xi(z)$ on the critical line [6, 8, 9, 15, 16]. By Theorem 3.3, each zero is either a center or a multiple zero with all elliptic sectors.

2. If a zero is simple then it must be a center, and then [4, Theorem 3.1] the boundary of the set of periodic orbits about the zero consists of separatrices. Since the neighboring zeros on the critical line are not in this neighborhood or on its boundary, a separatrix must touch and therefore

cross the critical line between the given zero and each of the neighboring zeros.

3. If the zero is multiple, by the functional equation for $\xi(z)$, its graph must be symmetric with respect to reflections in the critical line. Since each separatrix is unbounded and does not divide (there is a unique orbit through every point of $\mathbb{C}$ which is not a zero of $\xi(z)$), none can lie in the critical line. Therefore, again, a separatrix must cut the critical line between the zero and each of the neighboring zeros.

4. Since, by Lemma 3.1, no separatrix goes to infinity in $[-17, 18]\times\mathbb{R}$, the result now follows by the proof of Theorem 3.2. ▮

Definition 3.2. The j'th **crossing time** Δ_j, for $j \in \mathbb{Z}$, is the value of the integral

$$\Delta_j := \int_{\Gamma_j} \frac{dz}{\xi(z)}$$

where Γ_j is the j'th crossing separatrix, where the integral is taken in the positive direction of the flow $\dot{z} = \xi(z)$, with Γ_o being the x-axis. Then $\Delta_j > 0$ for all $j \in \mathbb{Z}$.

4. STRUCTURE OF BANDS

Definition 4.1. The open region between two crossing separatrices which does not contain any crossing separatrices is said to be a **band**. For each $j \in \mathbb{N}$ we let

$$B_j = \{z \in \mathbb{C} : \Gamma_{j-1}(\Re z) < \Im z < \Gamma_j(\Re z)\}$$

be the j'th band in the upper half plane, where $\Gamma_j(x) = \{y : (x, y) \in \Gamma_j\}$.

Lemma 4.1. *There exist at most a finite number of zeros in the interior of each band.*

Proof. Since each crossing separatrix tends asymptotically to the positive and negative real axis, there exists a positive real number M_j such that

$$B_j \subset \mathbb{R} \times (0, M_j)$$

and $\xi(z)$ has at most a finite number of zeros in sets of this form. ▮

LEMMA 4.2. *If there is just one zero inside a band (of any multiplicity) then that zero is on the critical line.*

Proof. This follows from symmetry of the band with respect to reflection in $x = \frac{1}{2}$: if the zero is off the line then there must be another distinct zero. ∎

DEFINITION 4.2. The **band number** of a band B is the number of crossings of separatrices which lie entirely within B of any vertical line $x = \sigma$ with $\sigma > 1$.

LEMMA 4.3. *The band number b_B of each band B is a non-negative finite integer.*

Proof.
Let Γ_n be the crossing separatrix which is the top band boundary of B. Then if $\sigma > 1$ is sufficiently large, at most a finite number of separatrices cut the interval $[\sigma, z]$ where z is the point where Γ_n meets the line $x = \sigma$. This provides an upper bound for b_B which is consequently finite. ∎

THEOREM 4.1. *The number of zeros within a band, including multiplicity, is one more than the band number. There is one zero at most on the critical line within each band.*

Proof. 1. Let B be a band with band number $b \geq 0$ and let $\sigma > 2$ (large, to be chosen later). Consider the region

$$\Omega = \{(-\sigma + \tfrac{1}{2}, \sigma + \tfrac{1}{2}) \times \mathbb{R}\} \cap B.$$

The boundary of Ω consists of four components, being two vertical intervals and two subsets of the bounding crossing separatrices. Let the angle made by the tangent to the crossing separatrix at $x = \sigma + \frac{1}{2}$ be $-\epsilon < 0$. Then the change in argument for $\xi(z)$ around the boundary of Ω is given approximately by

$$(b+1)\pi + 2\epsilon + (b+1)\pi - 2\epsilon = 2\pi(b+1)$$

where the approximation can be made as accurate as needed by choosing σ sufficiently large. Hence the index is $b + 1$. Since $\xi(z)$ entire this is the number of zeros in B.

2. If there were two or more zeros on the critical line within a band, then there would be two with no zero on the critical line between them. Each

would be a center or have all elliptic sectors. No separatrix can lie in (or be tangent to) the critical line, since by symmetry it would need to divide to go to infinity. Centers and elliptic sectors have all separatrices on their boundaries, by [2, Theorem 3.3], [4, Theorem 3.1, 3.2]. Hence there must be a separatrix cutting the critical line between the two zeros. But this is impossible, since B is a band which, by definition, contains no crossing separatrices. ▮

THEOREM 4.2. *The band number of a band is even if and only if there exists a zero of odd multiplicity on the critical line inside the band. If the band number is odd and a zero exists on the critical line within the band, it has even multiplicity. If all zeros within a band are simple and the band number is odd, then there are no zeros on the critical line within the band. If* $b = 1$*, and there is no zero on the critical line and within the band, then the two simple zeros off the line cannot be centers.*

Proof. 1. Let $b = 2n$ where $n \geq 0$. Then there are, by Theorem 4.2, $2n + 1$ zeros inside the band. There is at most one zero on the critical line within the band and, by symmetry, an even number off the line. Hence the multiplicity of the zero on the line must be odd. Conversely if there is a zero of odd multiplicity on the line, since there is only one and the zeros off the line come in mirror image pairs, the total number of zeros, including multiplicity, is odd, so the band number is even.

2. If $b = 2n + 1$ then the total number of zeros is even. At most one can be on the line and the remainder is even, hence the zero on the line has even multiplicity and cannot therefore exist if all zeros are simple.

3. If $b = 1$ and there were two centers off the line, the boundary of their set of surrounding periodic orbits cannot, by symmetry, touch or cross the critical line, so must enter and return from infinity on one side of the band. The subset of the band which is the complement of these two regions would have index one but no zero, giving a contradiction. ▮

DEFINITION 4.3. A **re-entrant** separatrix in a band B is a separatrix which comes from infinity and returns to infinity entirely within B on one side of the critical line. It does not touch the critical line. It will contribute 2 to the band number b_B.

DEFINITION 4.4. The **orbital neighborhood** of a zero z_o of a flow $\dot{z} = f(z)$, where $f(z)$ is entire, is defined as follows: if z_o is a center then it is the union of the the orbits which circulate about z_o with $\{z_o\}$. If z_o is multiple then it is the union of the separatrices which tend to or from z_o,

the orbits which tend to or from z_o and z_o. If z_o is a node or focus it is the basin of attraction or repulsion, whichever is non-empty, together with z_o.

The structure of orbital neighborhoods was worked out in [4]. Here we just give them a name.

LEMMA 4.4. *Let z_o be either a center or multiple zero for the entire flow $\dot{z} = f(z)$. If the orbital neighborhood of z_o is not $\mathbb{C}$ then there exists a separatrix on the boundary of the orbital neighborhood which tends to infinity in both the positive and negative direction.*

Proof. This follows from the structure theorems of [4]. It implies directly the following theorem. ∎

THEOREM 4.3. *Let P be a center or multiple zero of the flow $\dot{z} = \xi(z)$ in a band B which is not on the critical line. Then there is a re-entrant separatrix in B. If there also exists a center on the critical line in B, then the re-entrant separatrix, when regarded as a Jordan curve on S^2, separates the zero on the critical line from the zero not on the critical line.*

We adopt the same notation here for points which are mirror images in the critical line as used in [3], namely: if $0 < x < \frac{1}{2}$ let

$$P = \tfrac{1}{2} + x + i\gamma, P' = \tfrac{1}{2} - x + i\gamma.$$

If $f(z)$ is a holomorphic function then the residue of f at $z = a$ is denoted $\mathrm{Res(f(z), z = a)}$.

LEMMA 4.5. *The Laurent coefficients c_n of $1/\xi(z)$ at P and P' are related by the equation*

$$\overline{c_n(P)} = e^{in\pi} c_n(P').$$

Hence, on the critical line, each even Laurent coefficient is real and each odd coefficient pure imaginary.

Proof. Integrate $1/\xi(z)$ about a circle with center P and radius r which includes no other zeros of $\xi(z)$. Then

$$\begin{aligned}
c_n(P) &= \frac{1}{2\pi r^n}\int_0^{2\pi}\frac{e^{-in\theta}}{\xi(P+re^{i\theta})}d\theta \\
&= \frac{1}{2\pi r^n}\int_0^{2\pi}\frac{e^{-in\theta}}{\xi(1-\overline{P'}+re^{i\theta})}d\theta \\
&= \frac{1}{2\pi r^n}\int_0^{2\pi}\frac{e^{-in\theta}}{\overline{\xi(1-P'+re^{-i\theta})}}d\theta \\
&= \frac{1}{2\pi r^n}\overline{\int_0^{2\pi}\frac{e^{in\theta}}{\xi(P'-re^{-i\theta})}d\theta} \\
&= e^{in\pi}\overline{c_n(P')},
\end{aligned}$$

where the final step follows using the substitution $\theta \to \pi - \theta$. ▮

Corollary 4.1. *Any zero P (simple or multiple) of $\xi(z)$ on the critical line has*

$$\Re\mathrm{Res}(\frac{1}{\xi(\mathrm{z})}, \mathrm{z} = \mathrm{P}) = 0.$$

Lemma 4.6. *Let $r > 0$ and $n = 1, 2, \ldots$. Then*

$$I_{n+1}(r) := \int_{ir}^{-ir}\frac{dz}{z^{n+1}} = \frac{((-1)^n - 1)}{nr^n}i^n$$

where the path of integration is a semicircle of radius r center 0 with negative orientation. Therefore if n is odd with $n \geq 3$, $I_n(r) = 0$ and if n is even with $n \geq 2$, $I_n(r)$ is pure imaginary.

We sometimes use the abbreviation R(P) for $\mathrm{Res}(1/\xi(\mathrm{z}), \mathrm{z} = \mathrm{P})$.

Theorem 4.4. *Consider a fixed band having a simple zero on the critical line. Then*

$$\sum_{P\in\Omega_R}\Re\mathrm{Res}(\frac{1}{\xi(\mathrm{z})}, \mathrm{z} = \mathrm{P}) = 0,$$

where Ω_R is the right side of the band excluding the critical line.

Proof. Let the zero on the critical line inside the band be at P_o. Consider a contour Γ enclosing the right hand side of the band. Γ starts on the critical line, traverses the crossing separatrix, being the lower band

boundary left to right, comes back along the upper band boundary, goes down the critical line to within r of the zero, circumnavigates the zero with a semicircular arc to the right of the zero, and then continues down the critical line to the starting point. Note that the upper and lower band boundaries must have opposite flow orientations since b is even. Without loss of generality assume the orientations coincide with the direction of this path of integration.

Integrate $1/\xi(z)$ around Γ, assuming the upper and lower band boundaries meet at infinity (using $\xi(x) \geq x^x$)), and apply the residue theorem:

$$\tfrac{1}{2}\Delta_n + \tfrac{1}{2}\Delta_{n+1} + i_1(r) - \pi i \mathrm{R}(\mathrm{P_o}) + \epsilon(\mathrm{r}) + \mathrm{i_2(r)} = 2\pi \mathrm{i} \textstyle\sum_{\mathrm{P}\in\Omega_\mathrm{R}} \mathrm{R(P)}$$

where $i_1(r)$ and $i_2(r)$ represent the values of integrals along the critical line (so are pure imaginary), $\epsilon(r) \to 0$, and where the sum is over all of the zeros in the right half of the band and not on the critical line. Now integrate this same function around the entire band boundary:

$$\begin{aligned} \Delta_n + \Delta_{n+1} &= 2\pi i \mathrm{R}(\mathrm{P_o}) + 2\pi \mathrm{i}[\sum_{\mathrm{P}\in\Omega_\mathrm{R}} \mathrm{R(P)} + \sum_{\mathrm{P'}\in\Omega_\mathrm{L}} \mathrm{R(P')}] \\ &= 2\pi i \mathrm{R}(\mathrm{P_o}) + 4\pi \mathrm{i} \sum_{\mathrm{P}\in\Omega_\mathrm{R}} \mathrm{i}\Im\mathrm{R(P)}. \end{aligned}$$

Therefore

$$i_1(r) + i_2(r) + \epsilon(r) = 2\pi i \sum_{P\in\Omega_R} \Re\mathrm{R(P)}.$$

Since P_o is simple, we can replace the contour consisting of three parts on the left hand side of Ω_R, with a contour which agrees with the original for an arbitrarily short distance on the critical line, coincides with an orbit γ about P_o and completes with an arbitrarily short distance on the line. Let $i\eta(r,\gamma)$ be the contribution from the critical line sections, and $\rho(r,\gamma)$ from the orbit, where η and ρ are real. Then

$$i_1(r) - \pi i \mathrm{R}(\mathrm{P_o}) + \epsilon(\mathrm{r}) + \mathrm{i_2(r)} = \rho(\mathrm{r},\gamma) + \mathrm{i}\eta(\mathrm{r},\gamma).$$

Taking the imaginary part of this equation and letting $r \to 0+$ shows that $\lim_{r\to 0+} i_1(r) + i_2(r) + \epsilon(r) = 0$ and the proof is complete. ∎

Theorem 4.4 might be regarded as further (for example to the numerical evidence [1]) indicative evidence for the truth of the Riemann hypothesis.

Corollary 4.2. *If all zeros in a band are simple and there exists a zero on the critical line and a zero off the critical line in the band which is not*

a center then there must exist, in that same band and on the same side, at least one more zero which is also not a center.

Definition 4.5. Let B be a band which contains a multiple zero on the critical line. A **right sub-band** of B is the subset of $B \cap \{z : \Re z > \frac{1}{2}\}$ which includes all points which lie between two fixed adjacent separatrices of the flow.

Theorem 4.5. *If there is a zero on the critical line of order $m \geq 2$ in a band B, then if S denotes any of the right sub-bands of B with interior Ω_S:*

$$\sum_{P \in \Omega_S} \Re \mathrm{Res}(\frac{1}{\xi(\mathrm{z})}, \mathrm{z} = \mathrm{P}) = 0.$$

Proof. Let S be a top right sub-band. Let P_o be the multiple zero on the critical line within the band B. Fix a small circle of radius $r > 0$ and center P_o such that there are no other zeros inside or on this circle. Let γ be an orbit of the flow in the top sector at P_o. Construct a contour in S consisting of 5 segments as follows:

Start at the point Q where the first separatrix emanating from P_o, counting clockwise from the critical line, cuts the circle. Go out along this separatrix to ∞ and back along the top band boundary to the critical line. Go down the line to where the orbit γ meets the line, then traverse the orbit until it meets the circle. Finally move about the arc of the circle back to Q.

Integrate around this contour and apply the Residue Theorem:

$$\rho(r) + \frac{\Delta_{n+1}}{2} + \epsilon_1(\gamma, r) + j(\gamma, r) + \epsilon_2(\gamma, r) = 2\pi i \sum_{P \in \Omega_S} \mathrm{R(P)}$$

where the n′th term arises from the n′th segment of the contour described above, and where each functional term depends on its argument. The terms $\rho(r), j(\gamma, r)$ are both real and $\epsilon_1(\gamma, r), \epsilon_2(\gamma, r)$ can be made arbitrarily small by choice of γ. The result follows by taking imaginary parts of both sides.

The proof in case S is a bottom sub-band is similar. If S is neither top or bottom then a 5 segment contour can be constructed using the two bounding separatrices emanating from P_o. ∎

Corollary 4.3. *If there exists a zero of order $m \geq 2$ on the critical line in a band B and if Ω_R is the right half of B excluding the critical line:*

$$\sum_{P \in \Omega_R} \Re \mathrm{Res}(\frac{1}{\xi(\mathrm{z})}, \mathrm{z} = \mathrm{P}) = 0.$$

Theorem 4.6. *If there is a zero, at P_o say, on the critical line of order $m \geq 2$ in a band B, and Ω_R is the right sub-band of B and m is odd then:*

$$\Delta_n + \Delta_{n+1} + 2\pi \Im \mathrm{R}(\mathrm{P_o}) = \pm 4\pi \sum_{\mathrm{P} \in \Omega_\mathrm{R}} \Im \mathrm{Res}(\frac{1}{\xi(\mathrm{z})}, \mathrm{z} = \mathrm{P}).$$

If m is even:

$$\Delta_n - \Delta_{n+1} + 2\pi \Im \mathrm{R}(\mathrm{P_o}) = \pm 4\pi \sum_{\mathrm{P} \in \Omega_\mathrm{R}} \Im \mathrm{Res}(\frac{1}{\xi(\mathrm{z})}, \mathrm{z} = \mathrm{P}).$$

Proof. Let m be odd. The derivation with m is even is similar. Assume without loss in generality that the direction of the flow along the bottom separatrix is left to right. Expand $1/\xi(z)$ in a Laurent series about P_o:

$$\frac{1}{\xi(z)} = \sum_{j=-m}^{j=-1} \frac{c_j}{(z - P_o)^j} + h(z)$$

where $h(z)$ is holomorphic in a neighborhood of P_o. Let $r > 0$ be a sufficiently small positive radius. Γ be the 5 segment contour traversing the lower half band boundary, the upper half boundary, the critical line down to a point distant r from P_o, the arc of a semicircle radius r about P_o in a clockwise direction, and finally down the critical line back to the start point. Integrate $1/\xi(z)$ around Γ, assuming the upper and lower band boundaries meet at infinity, and apply the residue theorem:

$$\tfrac{1}{2}\Delta_n + \tfrac{1}{2}\Delta_{n+1} + i_1(r) + \textstyle\sum_{j=-m}^{j=-2} c_j I_j(r) - \pi i c_{-1} + H(r) + i_2(r) = 2\pi i \textstyle\sum_{P \in \Omega_R} \mathrm{R(P)}$$

where the sum is over all zeros of $\xi(z)$ in the right hand side of the band and off the critical line, where $i_1(r)$, $i_2(r)$ and c_{-1} are pure imaginary, and where $\lim_{r \to 0+} H(r) = 0$.

Now take the real part of this equation and let $r \to 0$:

$$\tfrac{1}{2}\Delta_n + \tfrac{1}{2}\Delta_{n+1} + \pi \Im \mathrm{R}(\mathrm{P_o}) = -2\pi \textstyle\sum_{\mathrm{P}} \Im \mathrm{R(P)}.$$

∎

Note that the situation $\Delta_n \geq \Delta_{n+1}$ appears unlikely, with the distribution of values of $\xi(z)$ tending to favor the relationship $\Delta_n < \Delta_{n+1}$ for all $n = 0, 1, 2, \ldots$. Assuming the Riemann hypothesis, and that all of the zeros are simple, implies directly (through integrating around the n'th band) that $\Delta_n < \Delta_{n+1}$. A resolution of this (which is formulated as a conjecture since it has implications for admissible zero configurations - see below) appears to require a better understanding of the behavior of separatrices in and near the critical strip.

THEOREM 4.7. *If there is no zero on the critical line inside a band B, then there exist at least two zeros inside the band which are simple and not centers, i.e. must be nodes or foci.*

Proof. Since each band contains at least one zero there are at least two zeros inside B. Suppose all zeros inside B are multiple and let z_o be such a zero, without loss of generality on the right side of B. Each separatrix emanating from z_o goes to infinity within B. The boundary of one elliptic sector at z_o, by Lemma 4.4, contains a re-entrant separatrix. Regard this as a Jordan curve and call the region on the side of z_o and including this separatrix, C_{z_o}. Let

$$\Omega := B \setminus \cup_{z_o} C_{z_o},$$

where the union is taken over all of the zeros inside B, is a region bounded by separatrices which does not contain any zeros. But the index of Ω is 1, because of the behavior of the flow at infinity, so it must contain a zero. This contradiction shows that at least one zero must be simple.

If all simple zeros inside the band were centers then again we could use Lemma 4.4 to find a re-entrant separatrix and remove a region, again leading to a contradiction. ∎

Note that if there is no zero on the critical line within the n'th band B, and we assume $\Delta_{n-1} < \Delta_n$, by integrating around the right half band boundary we see that

$$\sum_{P \in \Omega_R} \mathrm{R(P)}$$

must have non-zero real and imaginary parts. This implies, for example, that the zeros inside B cannot be all centers or all nodes. To illustrate the impact of some of these ideas, a page of sketches of band configurations with small band number is given as Figure 9. These are all of the potential band structures for $b = 1, 2, 3$, taking into account the restrictions on orbital neighborhoods derived in [4], up to a number of minor equivalences. They

have to be sketched, since actual examples have not been shown to exist. Some notes follow in which b is the band number, m the order of the zero on the critical line, and z the total number of zeros in the band including multiplicity. RH denotes the Riemann hypothesis.

(a) $b = 1, m = 2, z = 2$: consistent with all known constraints and RH.

(b) $b = 1, m = 0, z = 2$: by Theorem 4.6 the zeros must be nodes or foci. If $\Delta_n < \Delta_{n+1}$ then they must be foci. (To see this integrate around the right hand band boundary and use the fact that at a node $\xi'(P) \in \mathbb{R}$.

(c) $b = 2, m = 3, z = 3$: should not exist by Corollary 4.3.

(d) $b = 2, m = 1, z = 3$: by Corollary 4.2 the off line zeros must be centers, otherwise consistent.

(e) $b = 3, m = 4, z = 4$: will be excluded if $\Delta_n < \Delta_{n+1}$, otherwise consistent.

(f) $b = 3, m = 2, z = 4$: consistent with known constraints.

THEOREM 4.8. *For every band B, the band number $b = b_B = 0$ if and only if the Riemann hypothesis is satisfied and every zero on the critical line is simple.*

Proof. If $b = 0$ then there is exactly one zero with multiplicity one in B, so the zero must be on the critical line. Conversely if the Riemann hypothesis is satisfied and all zeros are simple then $b = 0$ since each band has exactly one zero. ∎

THEOREM 4.9. *The Riemann hypothesis (RH) implies that (a) there are no re-entrant separatrices and (b) all zeros are centers or are multiple zeros. Conversely (a) and (b), taken together, imply the Riemann hypothesis.*

Proof. 1. The existence of a re-entrant separatrix must imply the existence of at least one zero off the critical line, since the index of the region included within it and the band must be one or more. Hence RH implies (a).

2. That RH implies (b) is Theorem 3.3.

3. If all zeros are centers or multiple and there existed a zero which was not on the critical line, then, by Theorem 4.3, there would exist a re-entrant separatrix, contradicting (b), so (a) and (b) together imply RH. ∎

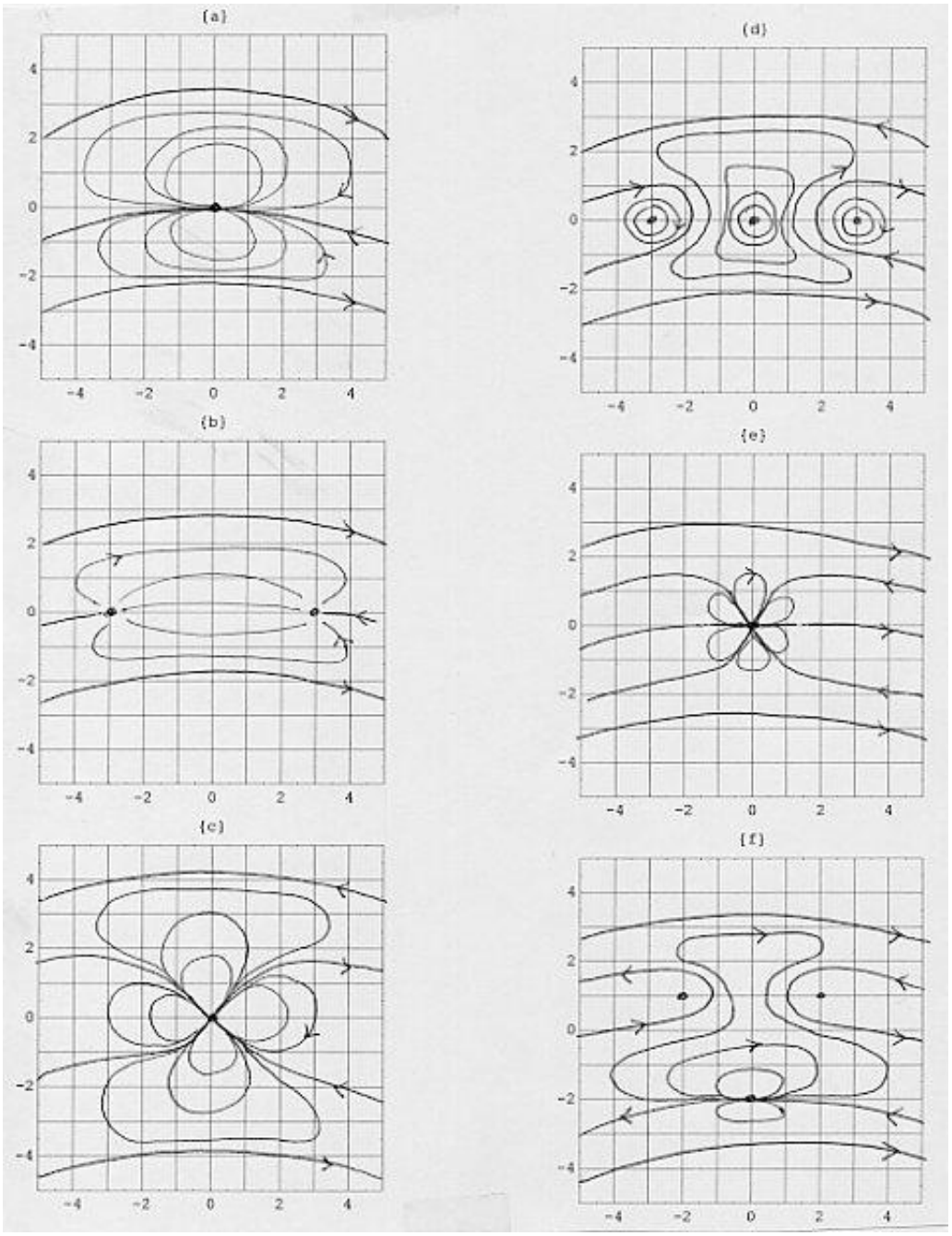

FIG. 9. Hypothetical zero configurations for $b = 1, 2, 3$.

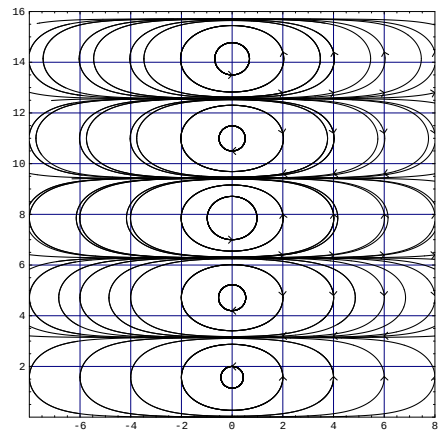

FIG. 10. Phase portrait for $\dot{z} = \cosh(z)$.

5. RELATIONSHIP WITH THE HYPERBOLIC COSINE FLOW

Example 5.1. The phase portrait for $\dot{z} = \cosh(z)$ is plotted below. Comparing Figure 1 with Figure 10, the close relationship between the functions ξ and cosh is quite evident. It may also be seen analytically through the representation [7, Page 17]:

$$\xi(z - \tfrac{1}{2}) = \eta(z) = \int_1^\infty f(x) \cosh(\tfrac{1}{2}(z - \tfrac{1}{2}) \log x) dx$$

where

$$\begin{aligned} f(x) &= 4 \frac{d[x^{3/2}\psi'(x)]}{dx} x^{-1/4} \\ \psi(x) &= \sum_{n=1}^{\infty} e^{-n^2 \pi x}. \end{aligned}$$

The equations of the orbits for $\dot{z} = \cosh(z)$ are $(x(t), y(t))$ where

$$\sin(y(t)) = \alpha \cosh(x(t))$$

with the parameter α taking all real values with $|\alpha| \leq 1$, the centers corresponding to $\alpha = 0$ and separatrices to $\alpha = \pm 1$.

Theorem 5.1. *If there exists a holomorphic function f defined on some open $\Omega \subset \mathbb{C}$, taking the integral paths of $\dot{z} = \eta(z)$ to the integral paths of*

$\dot{z} = \cosh(z)$, then $f'(z)\eta(z) = \cosh(f(z))$ for all $z \in \Omega$. The function f satisfies the third order differential equation

$$\eta f' f''' + \eta' f' f'' + \eta'' f'^2 = \eta f''^2 + \eta f'^4$$

and may be represented by the expression

$$f(z) = \sinh^{-1} \tan \int_0^z \frac{1}{\eta(z)} dz.$$

If $f(z)$ is meromorphic on Ω then f is holomorphic on Ω.

Proof. 1. Let $z = \gamma(t)$ be a parametrized path such that $\dot{\gamma}(t) = \eta(\gamma(t))$. Then $df(\gamma(t))/dt = \cosh(f(\gamma(t))$ so $f'(\gamma(t))\dot{\gamma}(t) = \cosh(f(\gamma(t))$ and therefore $f'(z)\eta(z) = \cosh(f(z))$. Therefore $\sinh(f(z))' = \cosh(f(z))f'(z) = \cosh^2(f(z)/\eta(z) = (1+\sinh^2(f(z)))/\eta(z)$, so $(\sinh(f(z)))'/1 + \sinh^2(f(z)) = 1/\eta(z)$ or, if we let $w := \sinh(f(z))$, it follows that $\tan^{-1} w = \int_0^z 1/\eta(z)dz$ so $f(z) = \sinh^{-1}[\tan \int_0^z 1/\eta(z)dz]$.

2. To derive the given differential equation, for f in terms of η, eliminate $\cosh(f(z))$ by differentiating twice. If $\zeta_o \in \Omega$ is a pole of finite order, applying the third order differential equation to the Laurent expansion in the neighborhood of z_o shows that the singularity must be removable. ∎

If $w(z)$ is the inverse function of $f(z)$, defined on some open neighborhood of $0 \in \mathbb{C}$, then

$$w'(z) = F(z, w(z)) = \frac{\eta(w(z))}{\cosh(z)}.$$

Assume also $w(0) = 0$. Then [12, Theorem 2.2.1] there is a unique holomorphic solution to the differential equation and initial condition in a neighborhood of 0. It is an even function of z and the power series expansion has real coefficients. This equation has the advantage that the fixed singularities of the differential equation are under control. The purpose of this section is simply to introduce the differential equation since its existence arose from an observation of the $\dot{z} = \xi(z)$ phase portrait.

ACKNOWLEDGMENT

This work was done in part while the author was on study leave at Columbia University. The support of the Department of Mathematics at Columbia University and the valuable discussions held with Patrick Gallagher are warmly acknowledged. For comments on the underlying computations see [3]. The figures in this paper were produced using Mathematica or by hand.

REFERENCES

1. Brent, R. P. *On the zeros of the Riemann zeta function in the critical strip*, Math. Comp. **33** (1979), 1361-1372.
2. Broughan, K. A. *Holomorphic flows on simply connected domains have no limit cycles*, Meccanica, (to appear).
3. Broughan, K. A. and Barnett, A. R. *Holomorphic flow of the Riemann zeta function*, Math. of Comp. (to appear).
4. Broughan, K. A. *Structure of sectors of zeros of entire flows*, (Topology Proceedings, to appear).
5. Broughan, K. A. *Web site for phase portraits of the zeros of $\xi(z)$:* **http://www.math.waikato.ac.nz/∼kab**.
6. Conrey, J. B. *More than two fifths of the zeros of the Riemann zeta function are on the critical line*, J. reine angew. Math. **399** (1989), 1-26.
7. Edwards, H. M. *Riemann's Zeta Function*, Dover, 1974, 2001.
8. Hardy, G. H. *Sur les Zéros de la fonction $\zeta(s)$ de Riemann*, C. R. Acad. Sci. Paris **158**(1914) 1012-1014.
9. Hardy, G. H. and Littlewood J. E. *The zeros of Riemann's zeta function on the real line*, Math. Z. **10** (1921), 283-317.
10. Hartman, P. *Ordinary Differential Equations*, Wiley, 1964.
11. Heath-Brown, D. R. *Simple zeros of the Riemann zeta function on the critical line*, Bull. London Math. Soc **11** (1979), 17-18.
12. Hille, E. *Ordinary Differential Equations in the Complex Domain*, Wiley, 1976.
13. Karatsuba, A.A. *Basic Analytic Number Theory.* New York, Berlin, Heidelberg: Springer-Verlag, 1993.
14. Kotus, J., Krych, M. and Nitecki, Z. *Global structural stability of flows on open surfaces*, Mem. Amer. Math. Soc. **37** (1982) no. 261.
15. Levinson, N. *More than one third of the zeros of the Riemann zeta function are on $\sigma = \frac{1}{2}$* Adv. in Math. **13** (1974), 383-436.
16. Selberg, A. *On the zeros of Riemann's zeta-function*, Skr. Norske vid.-Acad. Oslo, No. 10, (1942).